Type	Number	Value	Qty
Capacitor	C1, C2	2,2µF	2
Capacitor	C3	100nF	1
Capacitor	C4	100µF	1
Integrated circuit	IC1	CA3140E	1
Resistor	R1, R2	10KΩ	2
Resistor	R3, R4	4,7KΩ	2
Resistor	R5	15KΩ	1
Resistor	R6	240Ω	1
Variable resistor	VR6 Preset	100KΩ	1
Switch	P2, P4		1
LED	P3		1
Jack 3,5mm	SK1, SK2		2
9V battery terminals	P1		1

Advice

1. Solder the resistors
2. Solder the IC socket
3. Solder VR1
4. Solder C3, then the other capacitors
5. Solder the battery terminals and the switch
6. Solder pin-headers on P3 and Dupont wires on the LED legs
7. Solder jacks wires

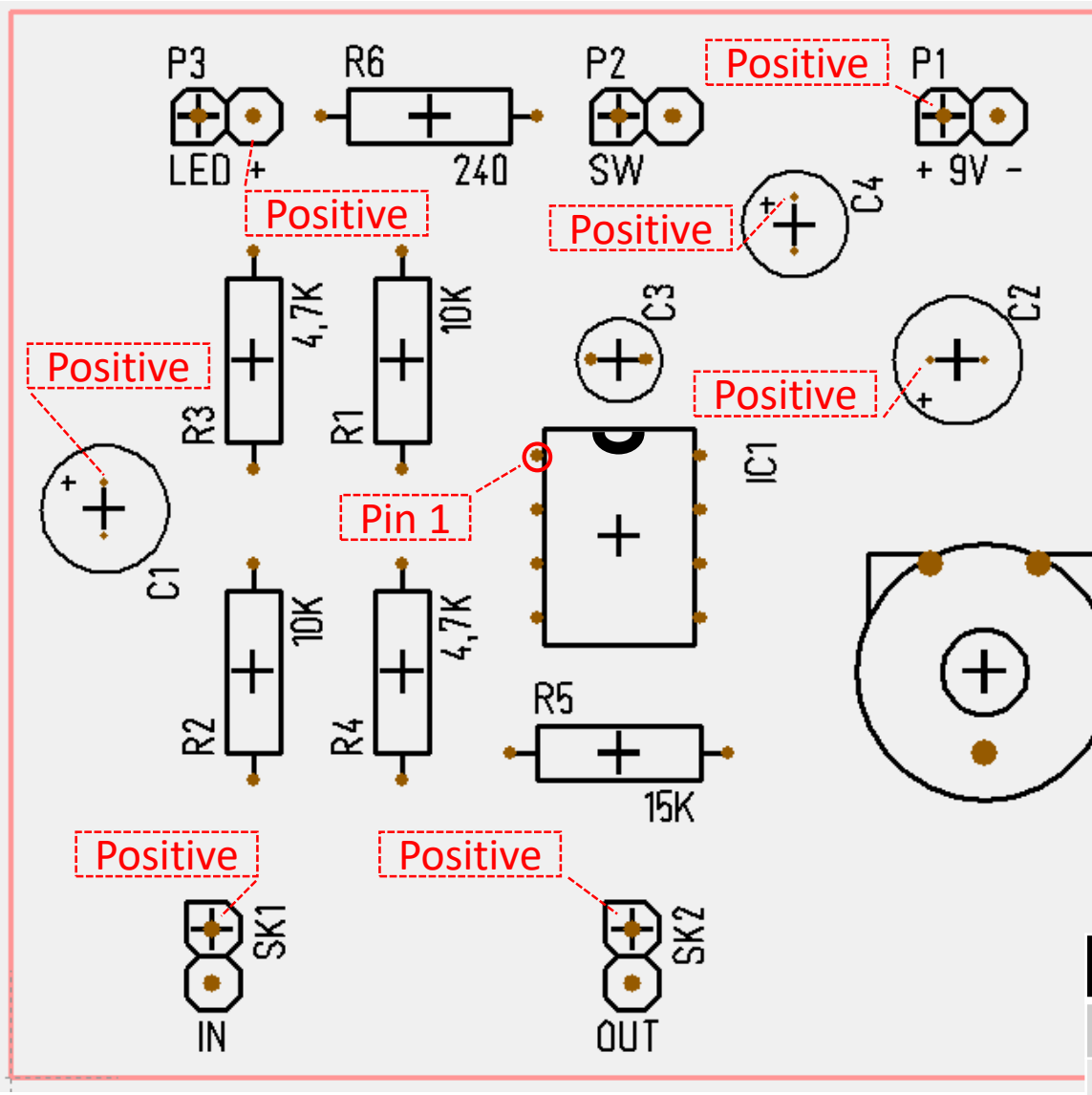

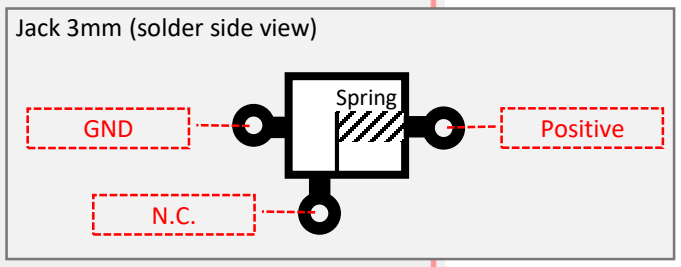

Resistor	Colour code
R1-R2	Brown-Black-Orange-Gold
R3-R4	Yellow-Violet-Red-Gold
R5	Brown-Green-Orange-Gold
R6	Red-Yellow-Black-Gold